TEST PRESSURE kg/cm²	
WATER	AIR
BODY	SEAT
106	6

REFERENCE STANDARD		
Basic Design		ASME B16.34, EN 12516
End-to-End		——
End Connections	SD	ISO 228-1, ISO 7/1, EN10226-1
		BS 21, BS 2779, DIN 2999
		ANSI B1.20.1
Inspection & Test		API 598, EN 12266-1
Mounting Flange		ISO 5211
Anti-Blow-Out Stem		ISO 17292
Additional Selection		
Anti-Static		EN 1983, ISO 17292

DISTRIBUTION

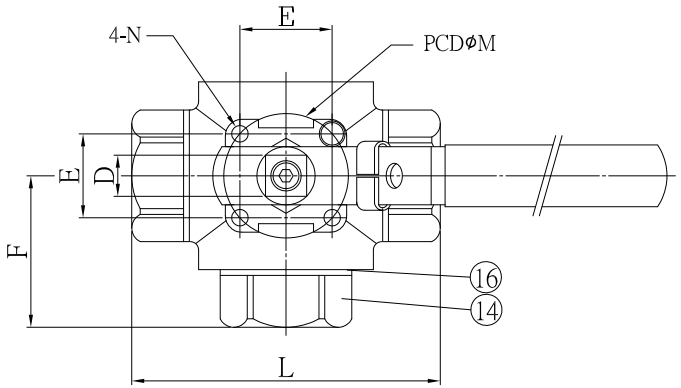

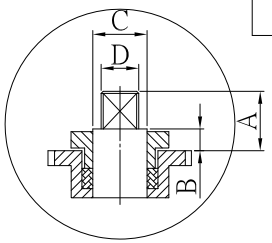

PORT / TYPE	0°	90°	180°	270°
L	1 2 3	1 2 3	1 2 3	1 2 3
T	1 2 3	1 2 3	1 2 3	1 2 3

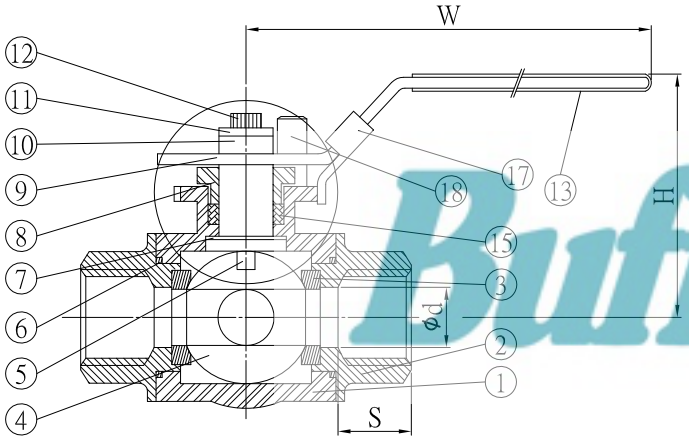

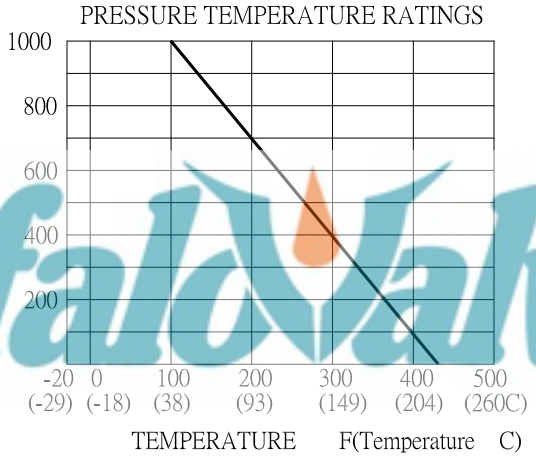

ITEM	PART	QTY	MATERIAL		
			A3WAYM-316	A3WAYM-304	A3WAYM-WCB⚠
1	BODY	1	ASTM-A351-CF8M	ASTM-A351-CF8	ASTM-A216-WCB
2	END CAP	2	ASTM-A351-CF8M	ASTM-A351-CF8	ASTM-A216-WCB
3	BALL SEAT	4	PTFE	PTFE	PTFE
4	BALL	1	ASTM-A351-CF8M	ASTM-A351-CF8	ASTM-A351-CF8
5	STEM	1	AISI 316	AISI 304	AISI 304
6	END SEALS	2	PTFE	PTFE	PTFE
7	THRUST WASHER	1	PTFE	PTFE	PTFE
8	GLAND NUT	1	AISI 304	AISI 304	AISI 304
9	HANDLE	1	AISI304	AISI 304	AISI 304
10	HANDLE WASHER	1	AISI 304	AISI 304	AISI 304
11	WASHER	1	AISI 304	AISI 304	AISI 304
12	HANDLE NUT	1	AISI 304	AISI 304	AISI 304
13	HANDLE SLEEVE	1	P.V.C	P.V.C	P.V.C
14	END CAP	1	ASTM-A351-CF8M	ASTM-A351-CF8	ASTM-A216-WCB
15	STEM PACKING	2	PTFE	PTFE	PTFE
16	END SEALS	1	PTFE	PTFE	PTFE
17	LOCK	1	AISI 304	AISI 304	AISI 304
18	STOP RING	1	AISI 304	AISI 304	AISI 304

SIZE	□d	L	E	B	D	C	A	F	W	H	M	N	TORQUE Kgf-cm	CV FACTOR	KGS
1/4"	11.0	64	29.7	4.0	9.0	12.7	10.0	32	132.0	58	42.0	M5x0.8	68	7.8	0.54
3/8"	11.0	64	29.7	4.0	9.0	12.7	10.0	32	132.0	58	42.0	M5x0.8	68	7.8	0.51
1/2"	12.7	75	29.7	6.5	9.0	12.7	12.5	36	132.0	65	42.0	M5x0.8	68	9.5	0.67
3/4"	16.0	84	35.4	8.0	10.7	15.0	15.5	42	180.0	82	50.0	M6x1.0	105	14.0	1.25
1"	20.0	101	35.4	9.5	10.7	15.0	17.0	50	180.0	90	50.0	M6x1.0	196	26.0	1.67
1 1/4"	25.0	119	35.4	9.5	10.7	15.0	17.0	59	180.0	95	50.0	M6x1.0	266	43.0	2.35
1 1/2"	32.0	130	49.5	8.0	14.0	20.0	19.0	62	232.0	101	70.0	M8x1.25	363	70.0	3.7
2"	38.0	148.5	49.5	8.0	14.0	20.0	19.0	72	232.0	109	70.0	M8x1.25	500	102.0	5.69

版次	日期	修改內容及位置說明	設變單號	修改人員
I	2016.01.01	圖面整合		陳治中
H	2012.11.21	ADD WCB系列BOM，配合報價單號VT20121115(台灣牌價) 無延伸		周涵琳

貴冠閥業	TRADE	AGENCY	CUS_NO	ITEM	NO	PART	QTY	EDITION	DATE
				V3WAYM		總圖(CATALOG)	1	I	2016.01.01

加工容許公差(mm)		鑄造容許公差(mm)				加工符號	表面粗度劃分 Rmax	RZ	Ra	
>0.5-6	±0.1	0~10	±0.2	75~100	±0.8	▽▽▽▽	0.8s	0.8z	0.2a	√Rz63
>6-30	±0.2	10~25	±0.25	>100	±1%	▽▽▽	6.3s	6.3z	1.6a	√Rz16
>30-120	±0.3	25~50	±0.4	角度	±1°	▽▽	25s	25z	6.3a	√Rz4
>120-400	±0.5	50~75	±0.6			▽	100s	100z	25a	√Rz1

MATERIAL	WEIGHT(kgs)	UNIT	SCALE	MANAGER	ENGINEER	QC	DRAWER
CF8/CF8M/WCB		MM	FREE				

TITLE: 台灣_A3WAYM_PN63_1/4"~2"_有鎖片_不鉆孔_PTFE_一般

REMARK:

DWG NO: AT9131Y0AA01I

圖面已發行

BuffaloValves