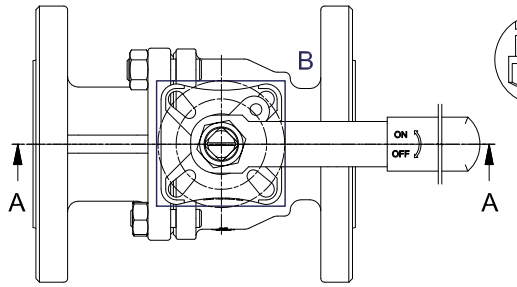

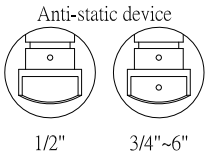

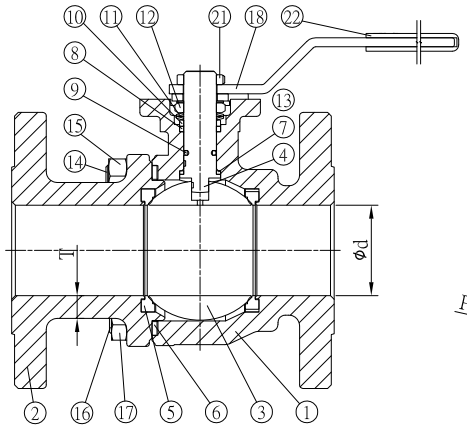

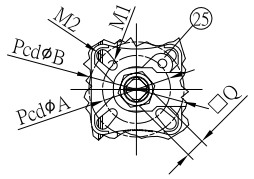

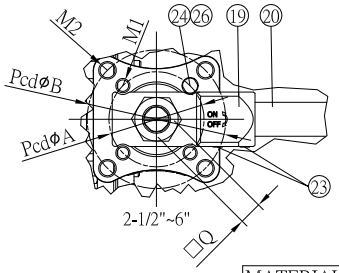

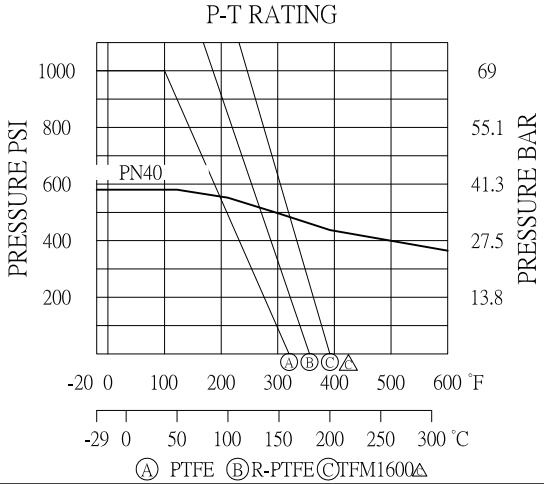

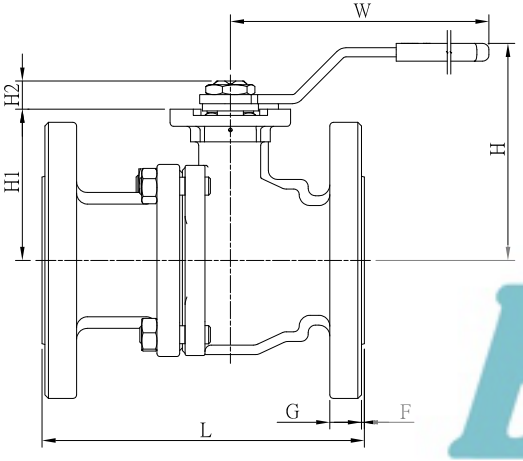

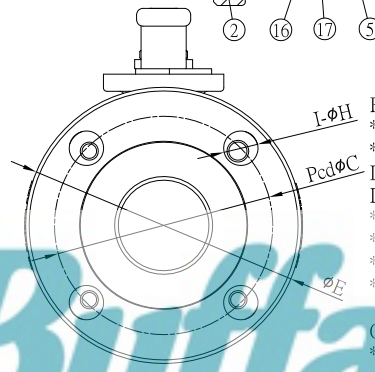

FEATURES:
*Flange: EN 1092-1 PN40
*Face to face:
DIN EN558 series 14 / DIN 3202 series F4(DN15~DN100) △
DIN EN558 series 15 / DIN 3202 series F5(DN125~DN150) △
*ISO 5211 Direct Mounting Pad
*Testing standards:API 598 / EN 12266-1
*Anti-static device
*Blow-out proof stem

OPTION:
*Fire-safe

BuffaloValves

MATERIAL LIST				
No.	PART	Q'ty	MATERIAL	
			1.4408	1.0619
1	BODY	1	1.4408	1.0619
2	END CAP	1	1.4408	1.0619
3	BALL	1	CF8M	CF8
4	STEM	1	316	
5	SEAT	2	PTFE / R-PTFE / TFM1600	
6	BODY SEAL	1	PTFE / R-PTFE / TFM1600 / GRAPHITE*	
7	THRUST WASHER	1	PTFE / R-PTFE / TFM1600	
8	STEM SEAL	2	PTFE / R-PTFE / TFM1600 / GRAPHITE*	
9	O-RING	1~2	VITON	
10	GLAND RING	1	304	
11	DISC SPRING	2	301	
12	STEM NUT	1	304	
13	LOCK WASHER	1	304	
14	BODY BOLT-1	1	304	
15	BODY NUT-1	1(1/2"~4")	304	
16	BODY BOLT-2	3~7	304	
17	BODY NUT-2	3~7(1/2"~4")	304	
18	HANDLE	1(1/2"~2")	304	
19	HANDLE ADAPTER	1(2-1/2"~6")	CF8	
20	HANDLE BAR	1(2-1/2"~6")	304	
21	HANDLE NUT	1	304	
22	HANDLE SLEEVE	1	PLASTIC	
23	SET SCREW	2(2-1/2"~6")	304	
24	STOP PIN	1(2-1/2"~6")	304	
25	STOPPER	1(1/2"~2")	304	
26	NUT FOR PART 24	1(5"~6"	304	

DIMENSIONS																			
SIZE	ød	øA	øB	øC	øE	F	G	I-H	M1	M2	□Q	L	W	H	H1	H2	T	TORQUE(Nm)	
																		PTFE	R-PTFE
1/2"	15	42	-	65	95	2.0	14	4-14	ø6	-	9.0	115	165 △	93	49.5	7.5	3.1	5.0	6.0
3/4"	20	42	50	75	105	2.0	16	4-14	R3.0	R3.5	9.0	120	165 △	97	53.1	8.0	5.0	8.0	10
1"	25	42	50	85	115	2.0	16	4-14	R3.0	R3.5	11	125	165	98	57.5	10.5 △	6.0	10.5	12.5
1-1/4"	32	50	70	100	140	2.0	16	4-18	R3.5	R4.5	14	130	205	106	71.5	15.5	6.0	15	18
1-1/2"	40	50	70	110	150	3.0	15	4-18	R3.5	R4.5	14	140	205	111	76.5	15.5	6.0	20	25
2"	50	50	70	125	165	3.0	17	4-18	R3.5	R4.5	14	150	205	118	83.5	15.5	6.5	25	30
2-1/2"	65	70	102	145	185	3.0	19	8-18	M10	ø11	17	170	280	152	118.5	18.5	6.5	38	45
3"	80	70	102	160	200	3.0	21	8-18	M10	ø11	17	180	280	163	129.5	18.5	7.0	58	70
4"	100	70	102	190	235	3.0	21	8-22	M10	ø11	17	190	380	178	145	18.5	7.0	85	100
5"	125	102	125	220	270	3.0	23	8-26	R6.0	R7.0	27	325	610	202	158.5	30 △	6.8	120	150
6"	150	102	125	250	300	3.0	25	8-26	R6.0	R7.0	27	350	610	219	175	30 △	7.1	160	200

Note : 1.Torque over standard within 5% is accepted.
2.The torque standard of TFM1600 is the same as R-PTFE.
3.The torque standard of fire-safe products is 1.25 times of above values.

ED.	DATE	REVISED CONTENT	Revision No.	Name
C	2022.09.16	1. 1/2~3/4 把手長度 2.TFM1600耐溫 3.如△C處		陳治中

Buffalo Valves	TRADE	AGENCY	CUS_NO	ITEM	NO	PART	QTY	EDITION	DATE	DISTRIBUTION
				V2FH		總圖(CATALOG)	1	C	2022.09.16	

TOLERANCE(mm)						SURFACE ROUGHNESS				
MACHINING		CASTING				SYMBOL	Rmax	RZ	Ra	
						▽▽▽▽	0.8s	0.8z	0.2a	√Rz63
0.5~6	±0.1	0~10	±0.2	75~100	±0.8	▽▽▽	6.3s	6.3z	1.6a	√Rz16
6~30	±0.2	10~25	±0.25	>100	±1%	▽▽	25s	25z	6.3a	√Rz4
30~120	±0.3	25~50	±0.4	ANGLE	±1°	▽	100s	100z	25a	√Rz1
120~400	±0.5	50~75	±0.6			~	▽			

MATERIAL	WEIGHT(kgs)	UNIT	SCALE	MANAGER	ENGINEER	QC	DRAWER
1.4408 / 1.0619		MM	FREE				

TITLE	台灣_V2FH_PN40_1/2"~6"_有鎖片_鉆孔_PTFE_一般
REMARK	非防火/防火
DWG NO	ATFH23Y1AA01C

圖面已發行