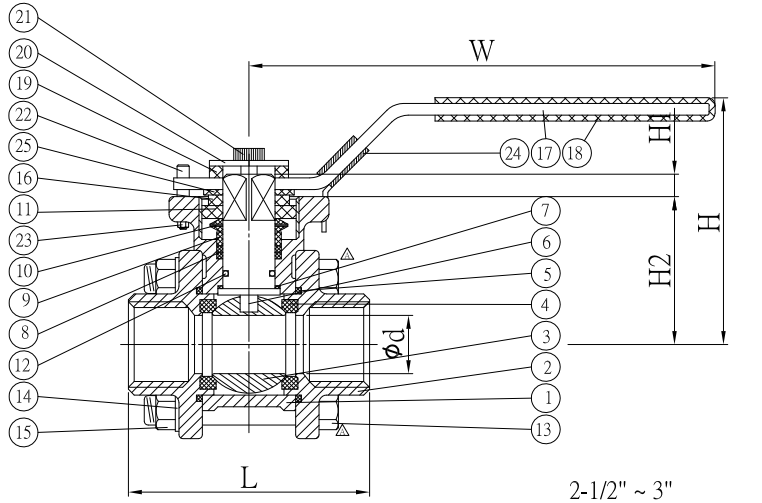

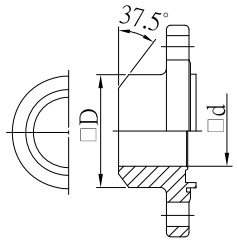

BUTT WELD END

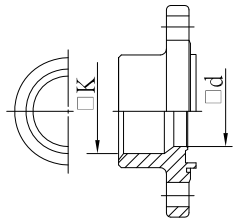

SOCKET WELD END

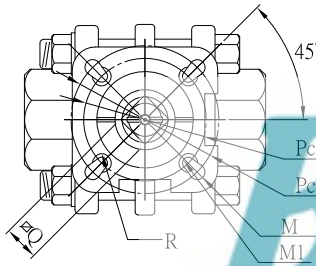

2-1/2"~3"_WITHOUT LOCKING DEVICE

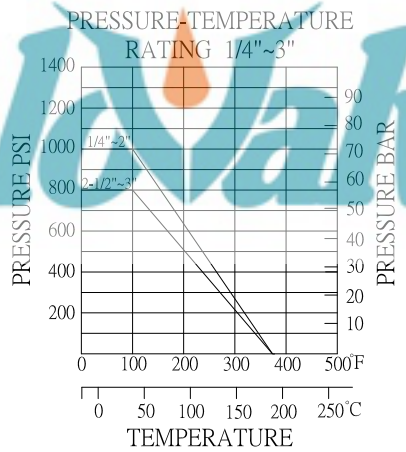

TEST PRESSURE kg/cm²	
WATER	AIR
BODY	SEAT
106	6

REFERENCE STANDARD		
Basic Design		ASME B16.34, EN 12516
End-to-End		DIN 3202-4 M3
End Connections	SD	ISO 228-1, ISO 7/1, EN10226-1
		BS 21, BS 2779, DIN 2999
		ANSI B1.20.1
	SW	ASME B16.11, EN 12760
	BW	ASME B16.25, EN 12627
Inspection & Test		API 598, EN 12266-1
Mounting Flange		ISO 5211
Fire-Safe Design		API 607
Anti-Blow-Out Stem		ISO 17292
Additional Selection		
		EN 1983, ISO 17292

DISTRIBUTION

ITEM	PARTS	QTY	MATERIALS		
			V3MH-316	V3MH-304	V3MH-WCB
1	BODY	1	ASTM-A351-CF8M	ASTM-A351-CF8	ASTM-A216-WCB
2	CAP	2	ASTM-A351-CF8M	ASTM-A351-CF8	ASTM-A216-WCB
3	BALL	1	ASTM-A351-CF8M	ASTM-A351-CF8	ASTM-A351-CF8
4	BALL SEAT	2	R-PTFE △	R-PTFE △	R-PTFE △
5	JOINT GASKET	2	R-PTFE △	R-PTFE △	R-PTFE △
6	STEM	1	AISI 316	AISI 304	AISI 304
7	THRUST WASHER	1	PTFE	PTFE	PTFE
8	STEM PACKING	2	PTFE	PTFE	PTFE
9	HIGH WASHER	1	AISI 304	AISI 304	AISI 304
10	BELLEVILLE WASHER	2	AISI 301	AISI 301	AISI 301
11	INSERT CAP	1	AISI 304	AISI 304	AISI 304
12	O-RING	1	VITON	VITON	VITON
13	BOLT	4 (2-1/2",3" x 6)	AISI 304	AISI 304	AISI 304
14	SPRING WASHER	4(2-1/2",3"x12)	AISI 304	AISI 304	AISI 304
15	HEX NUT	△	AISI 304	AISI 304	AISI 304
16	SQUARE WASHER	1	AISI 304	AISI 304	AISI 304
17	HANDLE	1	AISI 304	AISI 304	AISI 304
18	PLASTIC COVER	1	P.V.C	P.V.C	P.V.C
19	SQUARE WASHER	1	AISI 304	AISI 304	AISI 304
20	WASHER	1	AISI 304	AISI 304	AISI 304
21	HANDLE NUT	1	AISI 304	AISI 304	AISI 304
22	STOP PIN	1	AISI 304	AISI 304	AISI 304
23	HEX NUT	1	AISI 304	AISI 304	AISI 304
24	LOCK DEVICE	1	AISI 304	AISI 304	AISI 304
25	HENDLE SHIM	1	PTFE	PTFE	PTFE

NORMAL SIZE	□d	L±2 M3	L±2 BV	H±3	H1±1	H2	W$^{+0}_{-10}$	ISO-5211 Pcd □	ISO-5211 □	Q	□M	□M1	□D	R	□K	CV FACTOR	TORQUE kgf-cm	KGS
1/4"	11	55	55	68	8.0	37	117	F03	□36	9.0	R3.0	R3.0	□20	4.3	□14	6.6	40	0.46
								F04	□42									
3/8"	12.7	60	55	68	8.0	37	117	F03	□36	9.0	R3.0	R3.0	□20	4.3	□17.7	7.9	40	0.48
								F04	□42									
1/2"	15	75	60	70	8.5	38	117	F03	□36	9.0	R3.0	R3.0	□23	4.3	□21.7	11.2	54	0.54
								F04	□42									
3/4"	20	80	75	69	9.0	41.7	127	F03	□36	11	R3.0	R3.0	□28	4.3	□27.1	21	74	0.82
								F04	□42									
1"	25	90	80	78	9.0	44.4	170	F04	□42	11	R3.5	R3.0	□34	5.5	□33.5	34	104	1.1
								F05	□50									
1-1/4"	31.8	110	95	89	10.5	54	170	F04	□42	14	R3.5	R3.0	□41	5.5	□42.6	57	135	1.72
								F05	□50									
1-1/2"	38	120	105	100	10.5	59.5	182	F05	□50	14	R4.5	R3.5	□49	5.5	□48.7	80	180	2.3
								F07	□70									
2"	50	140	120	107	10.5	67	182	F05	□50	14	R4.5	R3.5	□62	5.5	□61.1	148	250	3.5
								F07	□70									
2-1/2"	65	185	155	153	18	102	333	F07	□70	17	M10	□11	□76		□73.8	265	400	12.38
								F10	□102									
3"	80	205	180	163	18	112.5	333	F07	□70	17	M10	□11	□92		□89.8	415	660	19.83
								F10	□102									

版次	日期	修改內容及位置說明	設變單號	修改人員
A	2016.01.01	1.圖面整合2.調整長螺絲方向3.△數量修正4.球墊&大片材質修正5.與非M3合併		陳治中

貴冠閥業	TRADE	AGENCY	CUS_NO	ITEM	NO	PART	QTY	EDITION	DATE
				V3MH	1	總圖(CATALOG)	1	A	2016.01.01

加工容許公差(mm)		鑄造容許公差(mm)				加工符號	表面粗度劃分 Rmax	RZ	Ra	
>0.5-6	±0.1	0~10	±0.2	75~100	±0.8	▽▽▽▽	0.8s	0.8z	0.2a	√Rz63
>6-30	±0.2	10~25	±0.25	>100	±1%	▽▽▽	6.3s	6.3z	1.6a	√Rz16
>30-120	±0.3	25~50	±0.4	角度	±1°	▽▽	25s	25z	6.3a	√Rz4
>120-400	±0.5	50~75	±0.6			▽	100s	100z	25a	√Rz1
						~			▽	

MATERIAL	WEIGHT(kgs)	UNIT	SCALE	MANAGER	ENGINEER	QC	DRAWER
CF8/CF8M/WCB		MM	FREE				

TITLE	台灣_A3MH_PN63(1000PSI)_1/4"~3"_有鎖片_不鉆孔_15%玻纖_一般
REMARK	1.M3/非M3長度 2.參考:AT8031Y0AA02A
DWG NO	AT8031Y0BA01A

圖面已發行

Buffalo Valve